REVISIONS						
CHANGE ORDER	SYM	DESCRIPTION	DATE	BY	CH'D	APP
508049	A	RELEASED	11-JAN-05	JDC	JDC	-

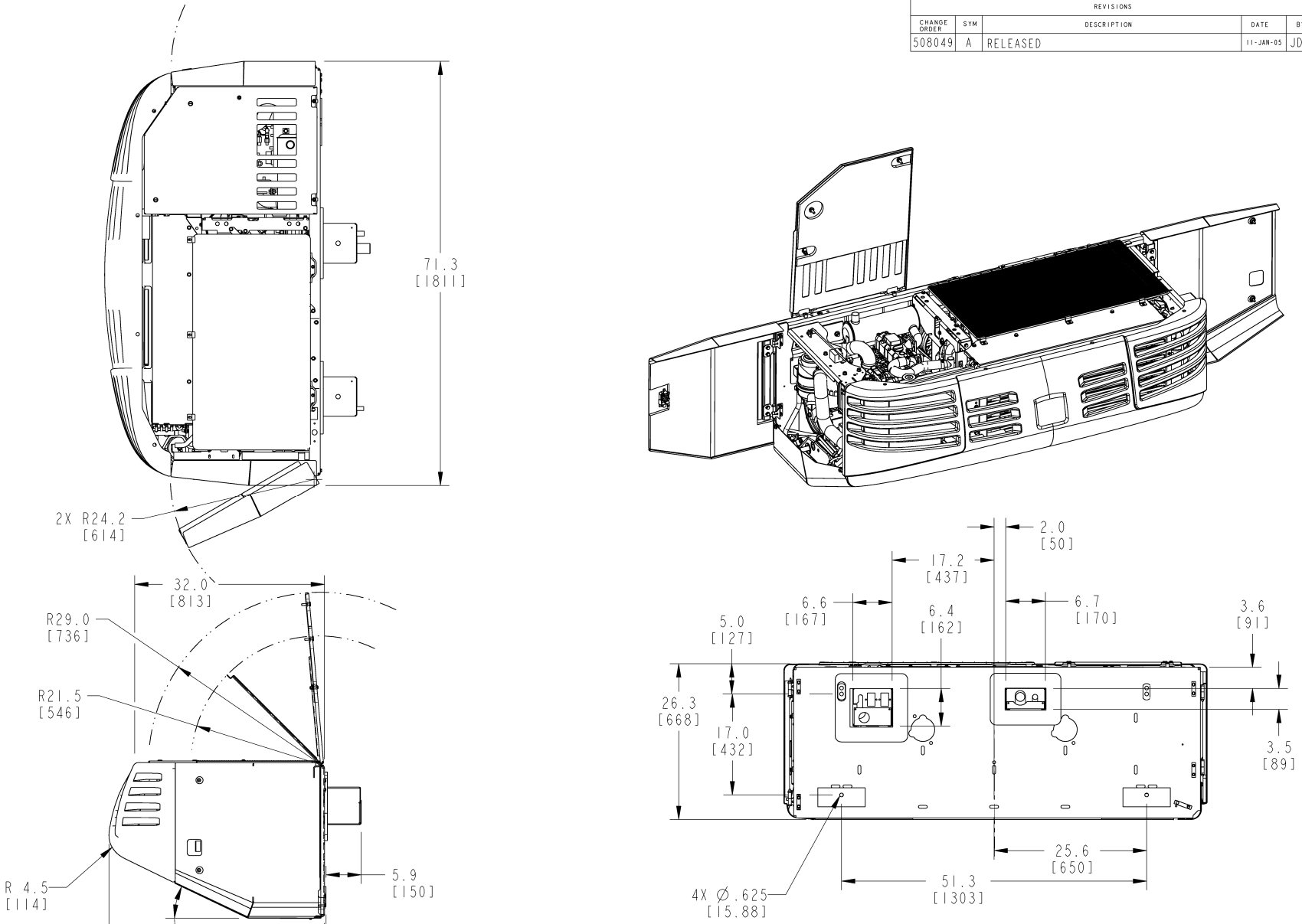

G05	G04	G03	G02	G01	ITEM NO	PART/DWG NUMBER	REV.	DESCRIPTION	MATERIAL SPEC	WEIGHT
					REV	LIST OF MATERIAL				

THERMO KING PROPRIETARY DATA

THIS DOCUMENT CONTAINS PROPRIETARY INFORMATION OF THE THERMO KING CORPORATION. IT IS TRANSMITTED TO YOU IN CONFIDENCE AND TRUST, AND IS TO BE RETURNED UPON REQUEST. ITS CONTENTS MAY NOT BE DISCLOSED IN WHOLE OR IN PART TO OTHERS OR USED FOR OTHER THAN THE PURPOSE FOR WHICH TRANSMITTED WITHOUT THE PRIOR WRITTEN PERMISSION OF THERMO KING CORPORATION.

© THERMO KING CORPORATION

FOR TOLERANCES NOT SPECIFIED SEE TKS09-109 TKS11-131

THIRD ANGLE PROJECTION

LIMITS NOT ACCUMULATIVE OVER A CONTINUOUS LINE OF DIMENSIONS

DRAWING CONFORMS TO ANSI Y14.5M-1982

DESIGN DIMENSIONS ARE IN INCHES
DIMENSIONS IN [] ARE MILLIMETRE EQUIVALENT

FINISH
NONE

DRAWN	DATE
JDC	26-May-99
CHECKED -	-
APPROVED -	-
APPROVED -	-

THIS PRINT SUPERSEDES ANY OF EARLIER DATE DESTROY SAME

DIAGRAM OUTLINE SPECTRUM

SCALE DRAWING SCALE | SHEET 1 OF 1

THERMO KING CORPORATION
MINNEAPOLIS, MINNESOTA USA

DRAWING NUMBER	REV
1E28624	A